CW Mill Equipment Co., Inc.
14 Commerce Drive Sabetha, KS 66534
Phone: (785) 284-3454
Fax: (785) 284-3601
Email: brackets@cwmill.com
Website: www.cwkits.com

IMK80SD508-I8

2017-2018 INTERNATIONAL

4300-4900

CUMMINS ISL 8.9L / L9

INSTALLATION NOTES

1. Disconnect negative battery cables. Remove the cable ties securing the air line going to the air clutch from the wire harnesses running in front of the head. Re-route the air line to the front side of wire harnesses in front of the head by removing and re-installing at the fitting on the firewall. This is to allow wiring to set back closer to engine for better clearance. Re-secure wire harnesses using cable ties (17).

2. Remove the serpentine belt. Remove the factory idler pulley and spacer located at location "A" above the water pump. This will be re-used. Remove the four bolts and hose standoff from the radiator support on the driver side of engine.

3. Install mounting plate (1) using bolts (3), lock washers (4). Retainers for overflow hose may need cut to prevent kinks. Do not tighten bolts. Install idler mount (2) using bolts (5,6) with flat washers (7) and lock washers (4), then bolt (11), OEM idler, and bushing (8) at location "A". Once all bolts are finger tight, first torque bolt (11), then torque mounting plate bolts (3). Once this is done, tighten the other idler bracket bolts (5,6). Install idler (9) to idler bracket (2) using bolt (10) and spacer (8).

4. Install the auxiliary A.C. compressor using bolts (13,14), nuts (15) and slide bushings (12). Install belt (16) according to the belt diagram below. Check all clearances to prevent damage to wiring, air lines, etc.. Reconnect battery cables.

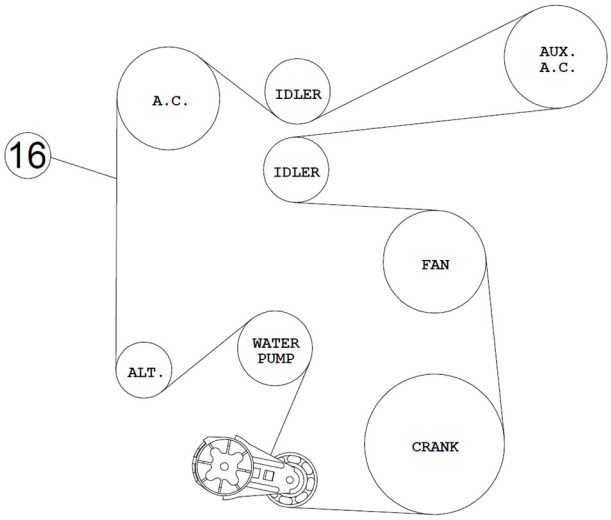

IMK80SD508-I8

2017-2018 INTERNATIONAL

4300-4900 CUMMINS ISL 8.9L / L9

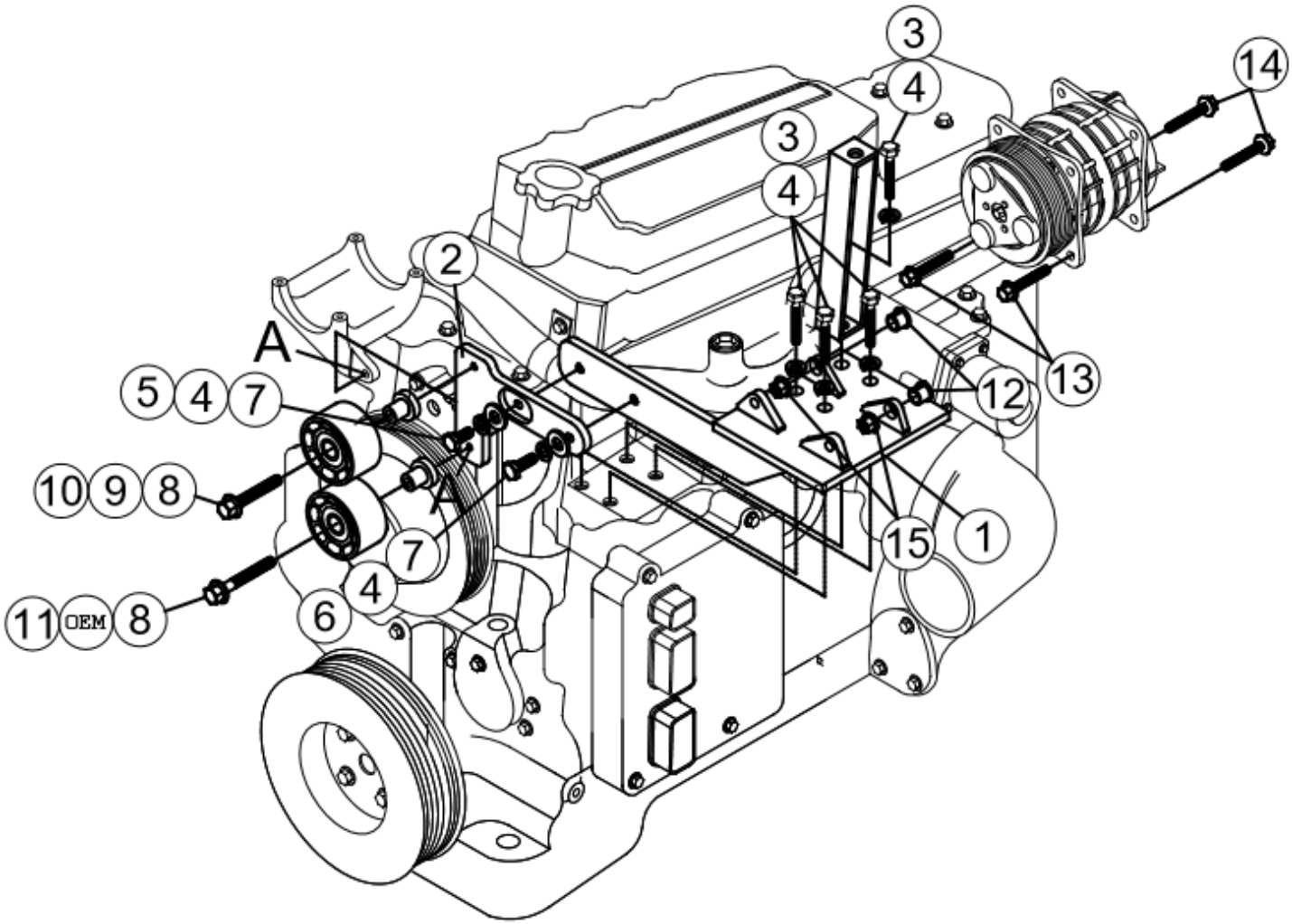

PARTS LIST

1. IMP80SD508-I8 (1)
2. FLMB801 (1)
3. 10mm x 65mm (4)
4. 10mm Lock Washer (6)
5. 10mm x 25mm (1)
6. 10mm x 30mm (1)
7. 10mm Flat Washer
8. CMB741 (2)
9. 89101 (1)
10. 10mm x 50mm Flange (1)
11. 10mm x 60mm Flange (1)
12. 1255-0090 Slide Bushing (2)
13. 10mm x 30mm Flange (2)
14. 10mm x 40mm Flange (2)
15. 10mm Flange Nut (2)
16. Dayco 5081254 (1)
17. 7” Zip Tie (6)
18. 15” Zip Tie (1)