CW Mill Equipment Co., Inc.
14 Commerce Drive Sabetha, KS 66534
Phone: (785) 284-3454
Fax: (785) 284-3601
Email: brackets@cwmill.com
Website: www.cwkits.com

MMK31SD508-8

2017-2018 MITSUBISHI FUSO
FE, FG, CANTER
3.0L DIESEL

INSTALLATION NOTES

1. Disconnect the negative battery cables. Remove the lifting lug from the front of the cylinder head. Remove the three bolts holding the fan shroud ring to the engine. Push the aluminum ring forward. Be careful not to damage the radiator. Remove the eight bolts holding the fan to the fan clutch. Set fan aside in engine bay.

2. Install the drive pulley (1) onto the engine crank pulley with bolts (2) torque to 12ft lbs. Install idlers (11) using bolts(13,16), flat washers(12,15), and bushings(10,14). Install bracket (3) using bolts (4,6,8) and lock washers(5,7,9). Install auxiliary air conditioning compressor using bolts (20,21) and nuts(22). Install tensioner(17) using bolt(18). Install the drive belt (24) as shown in the diagram on the back. Install the fan and fan spacer(19) with bolts(2)

3. Reconnect the negative battery cable. Run engine and check for proper belt tracking and clearance of all moving parts.

MMK31SD508-8

2017-2018 MITSUBISHI FUSO
FE, FG, CANTER
3.0L DIESEL

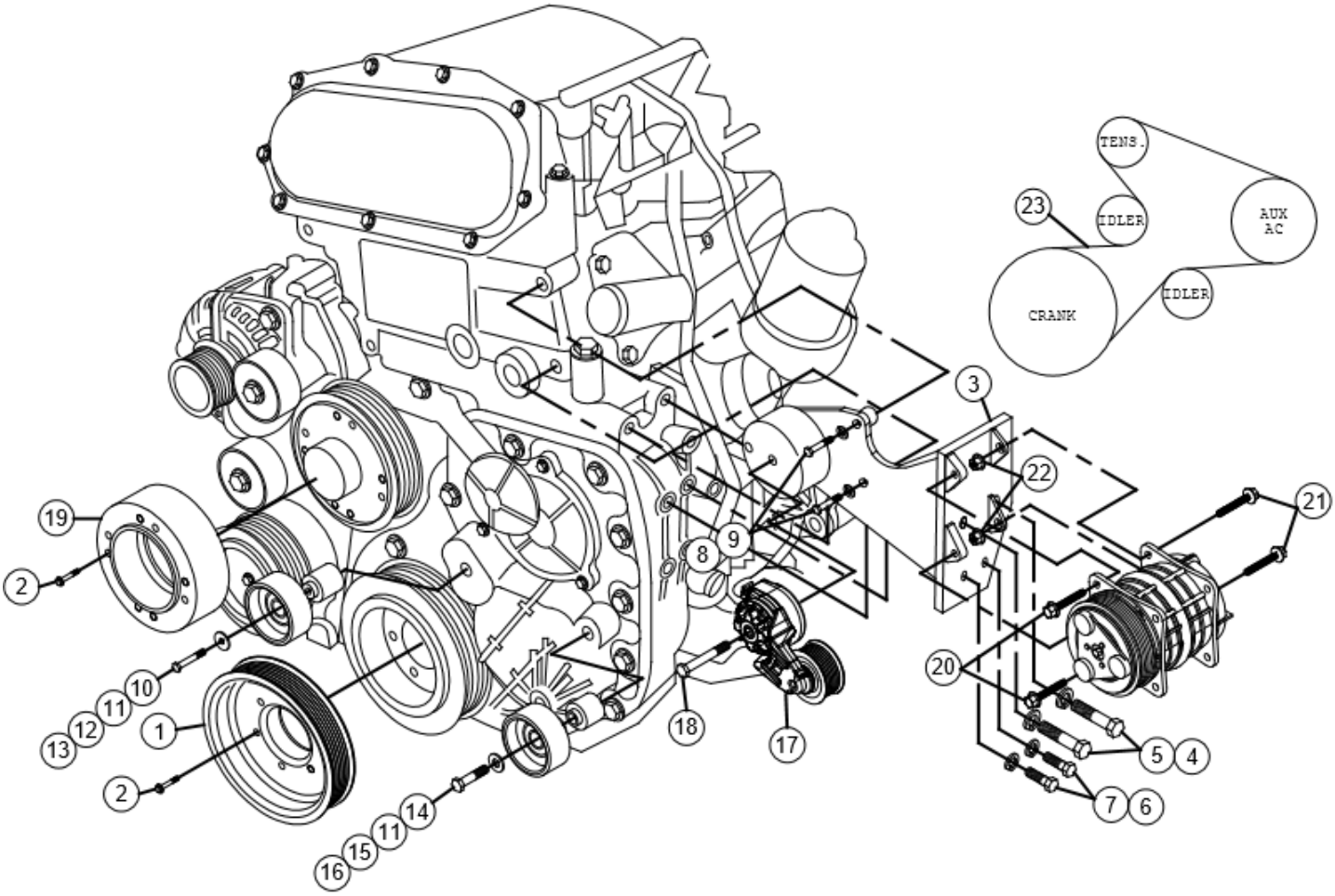

PARTS LIST

1. MPC318 (1)
2. 6mm x 60mm Flg (14)
3. MMP31SD508-8 (1)
4. 12mm x 65 x1.25mm (2)
5. 12mm LW (2)
6. 10mm x 35 x1.25mm (2)
7. 10mm LW (2)
8. 8mm x 40mm (2)
9. 8mm LW (2)
10. MMB312 (1)
11. Dayco 89016 (2)
12. FMB483-I6
13. 8mm x 70mm (1)
14. MMB311 (1)
15. 3/8 FW (1)
16. 10mm x 70mm (1)
17. 89273-GPCD8 (1)
18. 10mm x 80mm (1)
19. FS031 (1)
20. 10mm x 30mm Flange (2)
21. 10mm x 40mm Flange (2)
22. 10mm Flange Nut (2)
23. Dayco 5080585 (1)