CW Mill Equipment Co., Inc.
14 Commerce Drive Sabetha, KS 66534
Phone: (785) 284-3454
Fax: (785) 284-3601
Email: brackets@cwmill.com
Website: www.cwkits.com
MOUNTING KITS

FMK49SD508-I6

2014-2016 Ford F250-550 SUPER DUTY
6.2L V8 Triton Gas w/ AC

Requires 6 Groove Clutch
For use w/ TM13 TM15 or TM16 Ear Mount Compressor

INSTALLATION NOTES

1. The buyer is responsible for providing trained and experienced installation decision making with technical know-how to apply professional judgment that specifically applies to each individual installation

2. Be sure to read and understand all available information including but not limited to instructions, warnings, sales terms, and warranties for the vehicle and all system components prior to attempting installation.

3. Disconnect the battery and drain engine coolant enough to remove the upper radiator hose without losing coolant. Remove the air duct at the engine and air cleaner. Cut the hose off of one end of the crankcase vent quick couplers. It will be reused. Remove the upper radiator hose at the engine. Using a 1/2” ratchet or other suitable tool, depress the tensioner and remove the serpentine belt. Remove the OEM idler from location A. Remove the bolts at locations C, D, and E. Install bracket (1) onto the engine using bolts (4) at locations C, D, and E. (Do not tighten) Install brace (2) with bolt (6) at the engine, and bolts (5) into bracket (1). With all bolts installed finger tight, torque bolts (4) to 25 ft. lbs. Then torque bolt (6) to 40 ft. lbs. and bolts (5) to 25 ft. lbs.

   NOTE: On vehicles with black composite valve covers, it will be necessary to trim some plastic from the lower front portion of the valve cover for belt clearance.

4. Remove bolts from locations F, G, and H. Install studs (18) at all three locations. Slide spacers (17) over studs (18), then install idler bracket (16) using nuts (19). Install the O.E.M. idler that was removed onto bracket (16) using bushing (20) and bolt (21). Install idler (8) at location A with bolt (10) and washer (9). Install belt guard (3) with bolts (7). Do not tighten at this time. Install the auxiliary compressor to the bracket with bolts (12,13), nuts (14) and slide bushings (15). Install the belt (11) as shown in the belt routing diagram. Adjust the belt guard (3) to obtain 1/8" to 1/4" clearance then tighten bolts (7). Reinstall radio noise suppressor to top of bracket with bolt (7).

5. Install the upper radiator hose extension (33) using O.E.M. hose clamp onto the thermostat housing then install the upper radiator hose onto it using coupler (32) and hose clamps (34). Install the new air duct as shown in the illustration at the top right of the page three. New vent hose (28) needs to be installed onto the original 45 deg. elbow that was removed earlier using hose clamp (29). To obtain more clearance between the air duct elbow and the clutch, use the spacer (30) and bolt (31) that have been provided in the kit. Remove the rear air cleaner bolt and loosen the front one. Install the spacer (30) in the rear location between the fender and the rubber air cleaner grommet then install the longer bolt (31). Adjust the air cleaner box then tighten the bolts.

6. Replace the engine coolant and connect the battery. Make certain all wires and hoses disturbed during installation do not come in contact with any hot or moving parts. Run the engine and check for proper belt tracking.

CW Mill Equipment Co., Inc.
14 Commerce Drive Sabetha, KS 66534
Phone: (785) 284-3454
Fax: (785) 284-3601
Email: brackets@cwmill.com
Website: **www.cwkits.com**

FMK49SD508-I6

2014-2016 Ford F250-550 SUPER DUTY
6.2L V8 Triton Gas w/ AC

Requires 6 Groove Clutch
For use w/ TM13 TM15 or TM16 Ear Mount Compressor

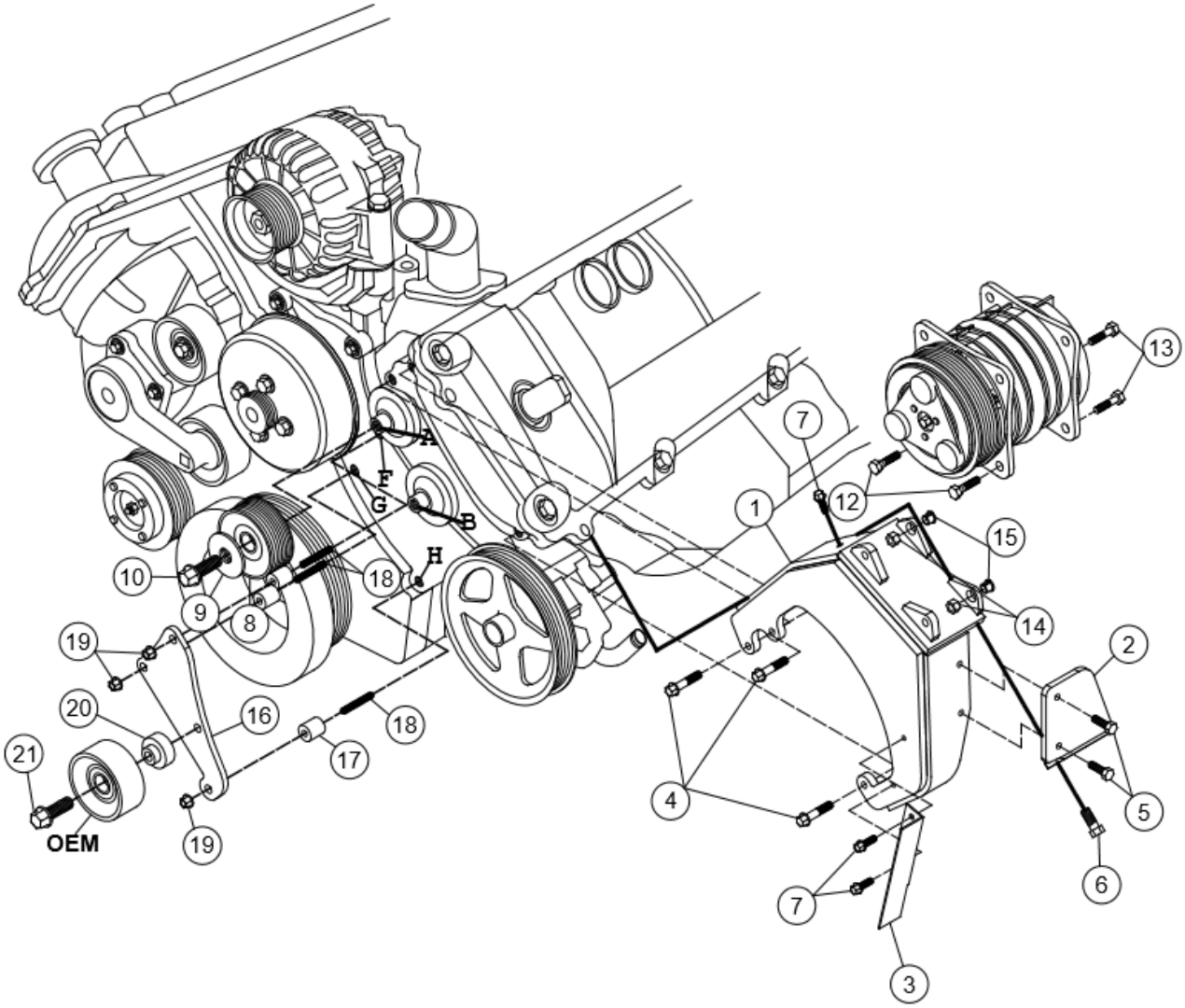

PARTS LIST

1. FMP48SD508-I6 (1)
2. FMB481-I6 (1)
3. FMB482-I6 (1)
4. 8mm x 50mm Flange (3)
5. 8mm x 20mm Flange (2)
6. 16mm x 30mm (1)
7. 8mm x 12mm Flange (3)
8. 89051 Dayco (1)
9. FMB483-I6 (1)
10. 8mm x 25mm Flange (1)
11. 5061265 Dayco (1)
12. 10mm x 30mm Flange (2)
13. 10mm x 40mm Flange (2)
14. 10mm Nut (2)
15. 1255-0090 Slide Bushing (2)
16. FMB493-I6 (1)
17. SP64-1.00 (3)
18. 8mm x 80mm Set Screw (3)
19. 8mm Flange Nut (3)
20. CMB3867 (1)
21. 10mm x 40mm Flange (1)
22. FMB491-I6 (1)
23. FMB492-I6 (1)
24. TP1189-01MOD (1)
25. TP1189-02MOD (1)
26. #56 Hose Clamp (6)
27. TCA352 (1)
28. 5/8” x 12” Hose (1)
29. #10 Hose Clamp (1)

Items (30-34) Not Shown

30. FMB484-I6 Spacer (1)
31. 8mm x 30mm Flange (1)
32. DMB402(1-1/2” Coupler) (1)
33. 1-1/2” x 2-3/4” Hose (1)
34. #24 Hose Clamp (2)

CW Mill Equipment Co., Inc.
14 Commerce Drive Sabetha, KS 66534
Phone: (785) 284-3454
Fax: (785) 284-3601
Email: brackets@cwmill.com
Website: **www.cwkits.com**

FMK49SD508-I6

2014-2016 Ford F250-550 SUPER DUTY
6.2L V8 Triton Gas w/ AC

Requires 6 Groove Clutch
For use w/ TM13 TM15 or TM16 Ear Mount Compressor

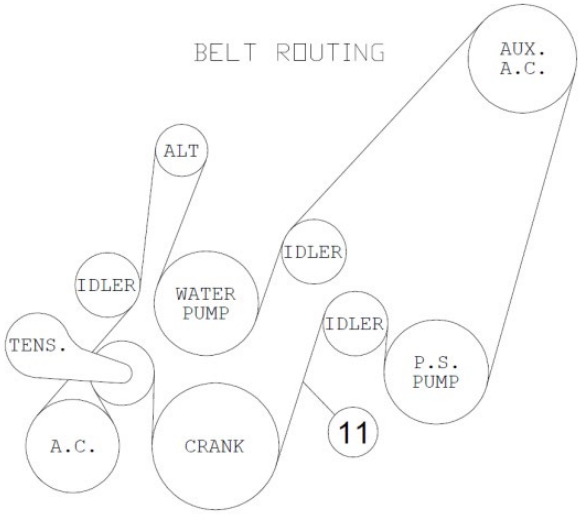

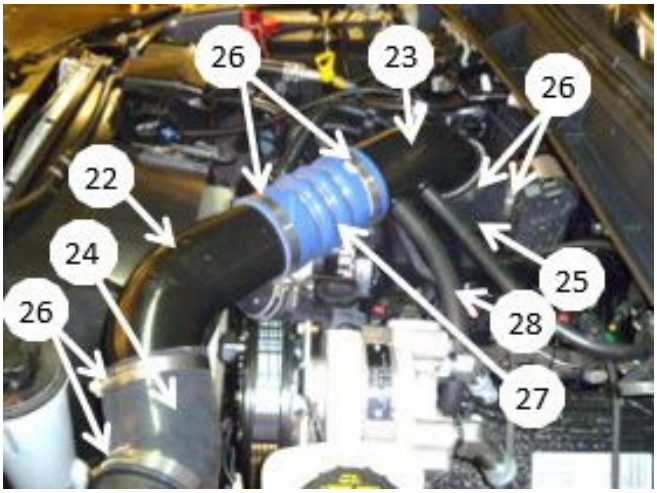

Disclaimer: (1.) Due to the custom nature and variation of all add-on systems of this type, no complete system kits are offered by the manufacturer, and any group of parts marketed as a kit is limited to only the individually defined parts in that specific kit. The system designer's rotating accessory components are not included, offered, or fully known by the manufacturer. In addition to the absence of the rotating accessory system, other potential components such as additional clamps, brackets, wear liners, hardware, or other items that may be required by the system designer must be identified and supplied by the actual system designer. (2.) Due to vehicle manufacturer's assembly tolerances, production changes, and installation variances, it is the buyer's responsibility to ensure adequate clearance for all components including space for and safe location of the fan, radiator, all lines, and wires. Check for possible movement, vibration, friction points, heat exposure and/or shifting of any and all components such as hoses, wires, and all other components including those that may otherwise be considered non-moving and/or unaffected by the installation (3.) The buyer is responsible for the entire installation of a mounting kit as the mounting kit is part of a custom process controlled by the buyer through their whole system design and directed installer as the installer evaluates, locates, routes, aligns, and tightens all components while determining if additional clamps, brackets, wear-liners, or other components may be required, beyond those included in the kit. Any additional items required, beyond those included in the kit, are to be provided at the expense of the buyer. (4.) The buyer is responsible for the development and communication of their whole system installation procedures, safety precautions, application, and use of the engine accessory mounting kit in their system, including efforts to maintain vehicle control and prevent pinch, wear, impact, and/or burn exposure on all hoses, wires, and other parts. (5.) The buyer is responsible for providing trained and experienced installation decision making with technical know-how to apply professional judgment that specifically applies to each individual installation. The buyers chosen installers must be qualified and experienced technicians that are familiar with the vehicle and accessory being mounted as well as the buyer's whole system design and installation procedures associated with the kit. (6.) The buyer is responsible for determining and achieving compliance to all regulatory issues that apply to the use of all products. (7.) The manufacturer reserves the right to make changes and/or improvements to any product at any time with or without notice.