CW Mill Equipment Co., Inc.
14 Commerce Drive Sabetha, KS 66534
Phone: (785) 284-3454
Fax: (785) 284-3601
Email: brackets@cwmill.com
Website: www.cwkits.com
MOUNTING KITS

SMK39A-I6

2021 Isuzu NPR-NPR-HD
2021 Chevrolet LCF 3500-4500
6.6L V8 Gas w/ A/C, w/o Dual Alternators

Requires SAE Two-Bolt 'A' Flange Pump; 6-Groove Clutch
Recommended 1.25 in^3 or 6 gal. Pump w/ 10hp Restriction (For Clearance)
Both Side and/or Rear-Ported Pump is Applicable
125% Overdrive Ratio w/ 6" Diameter Clutch

INSTALLATION NOTES

1. The buyer is responsible for providing trained and experienced installation decision making with technical know-how to apply professional judgment that specifically applies to each individual installation.

2. Be sure to read and understand all available information including but not limited to instructions, warnings, sale terms, and warranties for the vehicle and all system components prior to attempting installation.

3. Disconnect the negative battery cable. Remove the OEM fan and fan ring from the vehicle (it is not necessary to remove, but it does make installation easier). Remove the OEM fan ring support bracket from the OEM power steering/vacuum pump bracket. It will not be reused. Remove the OEM engine belt. Remove the OEM power steering pump from the OEM power steering/vacuum pump bracket. There are three bolts holding it on that are accessible through the OEM power steering pump pulley. Remove the hoses connected to the OEM vacuum pump. Then, remove the OEM vacuum pump. Finally, remove the three bolts holding the OEM power steering/vacuum pump bracket to the engine. Remove the bracket. They will not be reused.

4. Place the clutch pump on top of the transmission coolant lines next to the engine on the driver's side of the vehicle. Install mounting bracket (1) onto the engine with mounting hardware (2-5) at locations [A,B]. Install all bolts before tightening any of them. Torque bolts (2) to 35 ft/lbs. Torque bolts (4) to 24 ft/lbs.

5. Install the clutch pump according to the manufacturer's specification to mounting bracket (1) with mounting hardware (13-16). Install the OEM vacuum pump onto mounting bracket (1) with mounting hardware (7). Reconnect the hoses to the vacuum pump. Secure with zip ties. Torque bolts to 20-24 ft/lbs.

NOTE: It may be necessary to cut some from the lower vacuum hose for clearance to the frame.

6. Drain fluid from the OEM power steering pump. Remove the return hose from the pump. Install the OEM power steering pump onto mounting bracket (1) with mounting hardware (6). <u>The pressure line at the pump may need to be slightly bent to relieve any stress on the pressure hose.</u> Install the power steering return hose (21) onto the OEM power steering pump, and the other end onto the steel return line at the frame with clamps (22). Replace power steering fluid to proper levels.

7. Install smooth idler pulley assembly (8-12) onto mounting bracket (1). Do not tighten at this time. Install belt (23), and route it as shown in the belt diagram. With the tensioner fully loaded, slide the smooth idler pulley assembly (8-12) down as far as possible. Then, tighten nut (12). Release tensioner, and check for proper belt tension. Adjust any component needed to if necessary.

8. If removed, replace the OEM fan and fan ring. Install fan ring standoff brace (18) onto mounting bracket (1) with fan ring standoff bushing (17) and bolt (19). Do not tighten. Install the other end of the fan ring standoff brace (18) to the fan ring with OEM bolt and nut (20). Secure nut (20) and bolt (19) at this time.

9. Reconnect the negative battery cable.

<u>CAUTION:</u> Before starting the engine. Check to make certain no wires, hoses, etc. that may have been disturbed during installation do not come in contact with any hot or moving parts. Run the engine and check for proper belt tracking, adjust if necessary.

CW Mill Equipment Co., Inc.
14 Commerce Drive Sabetha, KS 66534
Phone: (785) 284-3454
Fax: (785) 284-3601
Email: brackets@cwmill.com
Website: **www.cwkits.com**

SMK39A-I6

2021 Isuzu NPR-NPR-HD
2021 Chevrolet LCF 3500-4500
6.6L V8 Gas w/ A/C, w/o Dual Alternators

Requires SAE Two-Bolt 'A' Flange Pump; 6-Groove Clutch
Recommended 1.25 in^3 or 6 gal. Pump w/ 10hp Restriction (For Clearance)
Both Side and/or Rear-Ported Pump is Applicable
125% Overdrive Ratio w/ 6" Diameter Clutch

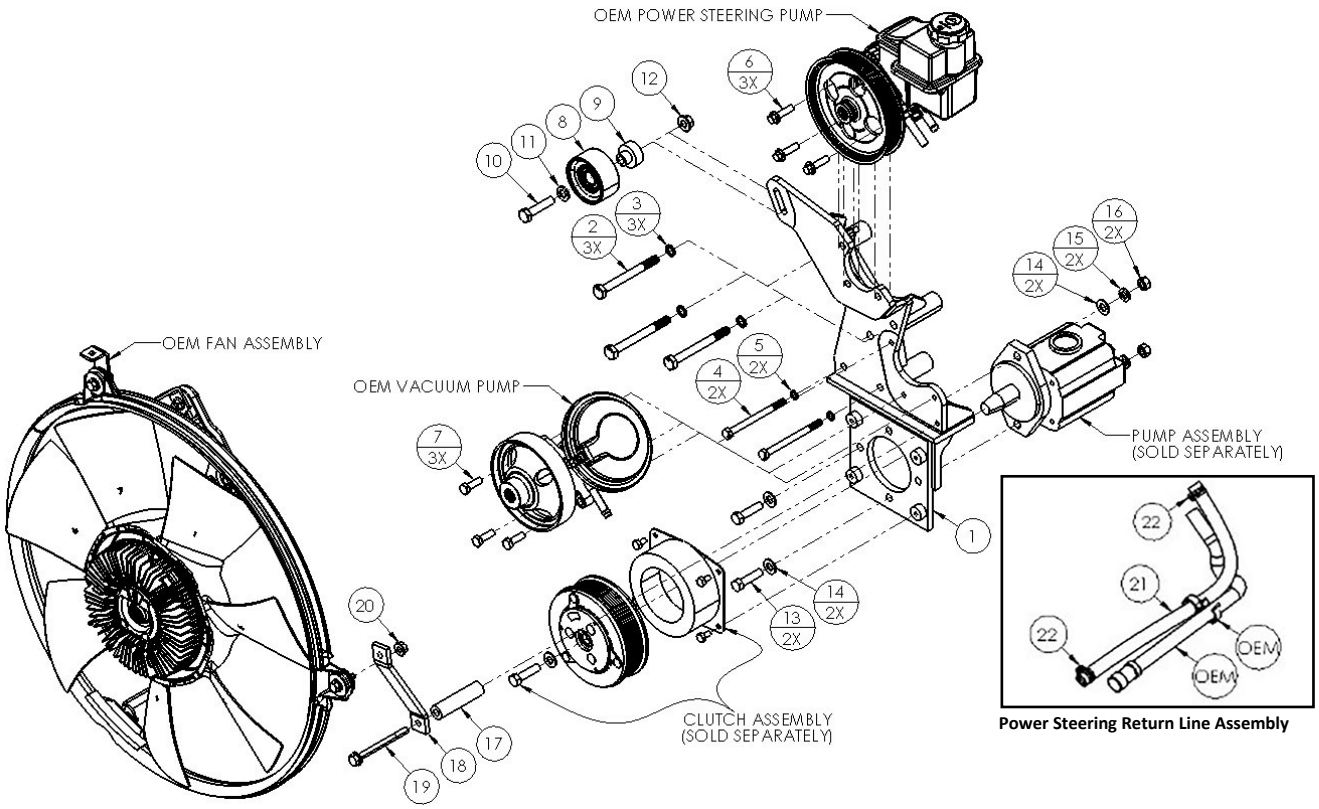

Power Steering Return Line Assembly

PARTS LIST							
Item	**Part Number**	**Description**	**Qty.**	**Item**	**Part Number**	**Description**	**Qty.**
Main Bracket				**Auxiliary Clutch Pump Mounting Hardware**			
1	SMB39A-I6	Main Bracket	1	13	1005139	3/8"-16 NC x 1-1/2" 5Gr Hex Bolt	2
Main Bracket Mounting Hardware				14	1007644	3/8" USS Flat Washer	4
2	1003981	M10-1.5 x 100mm 10.9Gr Hex Bolt	3	15	1010315	3/8" MED Lock Washer	2
3	1003822	M10 Lock Washer	3	16	1010314	3/8"-16 NC 5Gr Hex Nut	2
4	1011957	M8-1.25 x 100mm 10.9Gr Hex Bolt	2	**Fan Shroud Standoff Assembly**			
5	1006174	M8 Lock Washer	2	17	SMB39-I6-1	Fan Shroud Standoff Bushing	1
OEM Power Steering Pump Mounting Hardware				18	SMB39-I6-2	Fan Shroud Standoff Brace	1
6	1013349	M8-1.25 x 30mm 10.9Gr Hex Flange Bolt	3	19	1011688	M8-1.25 x 90mm 10.9Gr Hex Flange Bolt	1
OEM Vacuum Pump Mounting Hardware				20	1013333	M8-1.25 10.9Gr Hex Flange Nut	1
7	1010201	M8-1.25 x 25mm 10.9Gr Hex Bolt	3	**Power Steering Return Line Assembly**			
Smooth Idler Pulley Assembly				21	1022512	3/8" Power Steering Return Line Hose	14"
8	IPCS2.5	Custom Assembled Smooth Idler Pulley	1	22	1016347	#4 Hose Clamp	2
9	VDMB306	Machined Idler Pulley Bushing	1	**Belt (Only One Belt is Supplied)**			
10	1006630	M10-1.5 x 45mm 10.9Gr Hex Bolt	1	23	5061055	Dayco 6-Groove 105.5" Belt	1
11	1003748	M10 Flat Washer	1		6PK2680	Bando 6-Groove 268.0mm Belt	1
12	1018204	M10-1.5 10.9Gr Hex Flange Nut	1				

CW Mill Equipment Co., Inc.
14 Commerce Drive Sabetha, KS 66534
Phone: (785) 284-3454
Fax: (785) 284-3601
Email: brackets@cwmill.com
Website: **www.cwkits.com**

SMK39A-I6

2021 Isuzu NPR-NPR-HD
2021 Chevrolet LCF 3500-4500
6.6L V8 Gas w/ A/C, w/o Dual Alternators

Requires SAE Two-Bolt 'A' Flange Pump; 6-Groove Clutch
Recommended 1.25 in^3 or 6 gal. Pump w/ 10hp Restriction (For Clearance)
Both Side and/or Rear-Ported Pump is Applicable
125% Overdrive Ratio w/ 6" Diameter Clutch

Mounting Locations

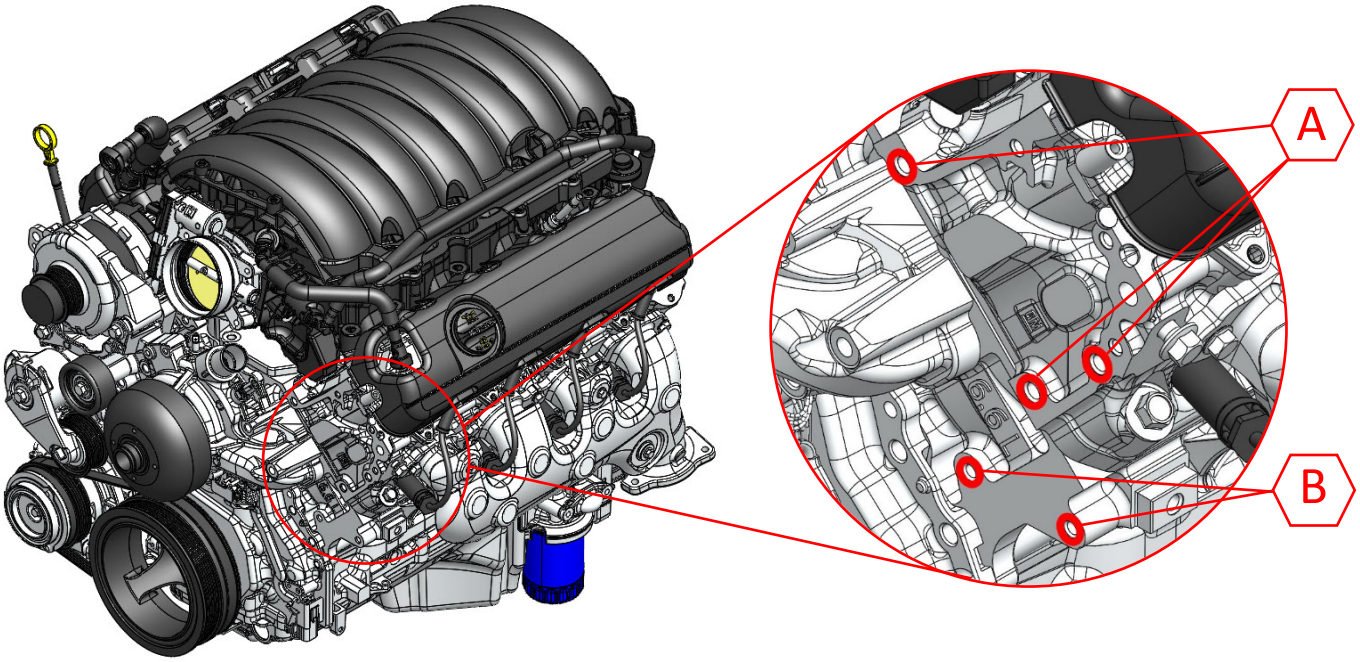

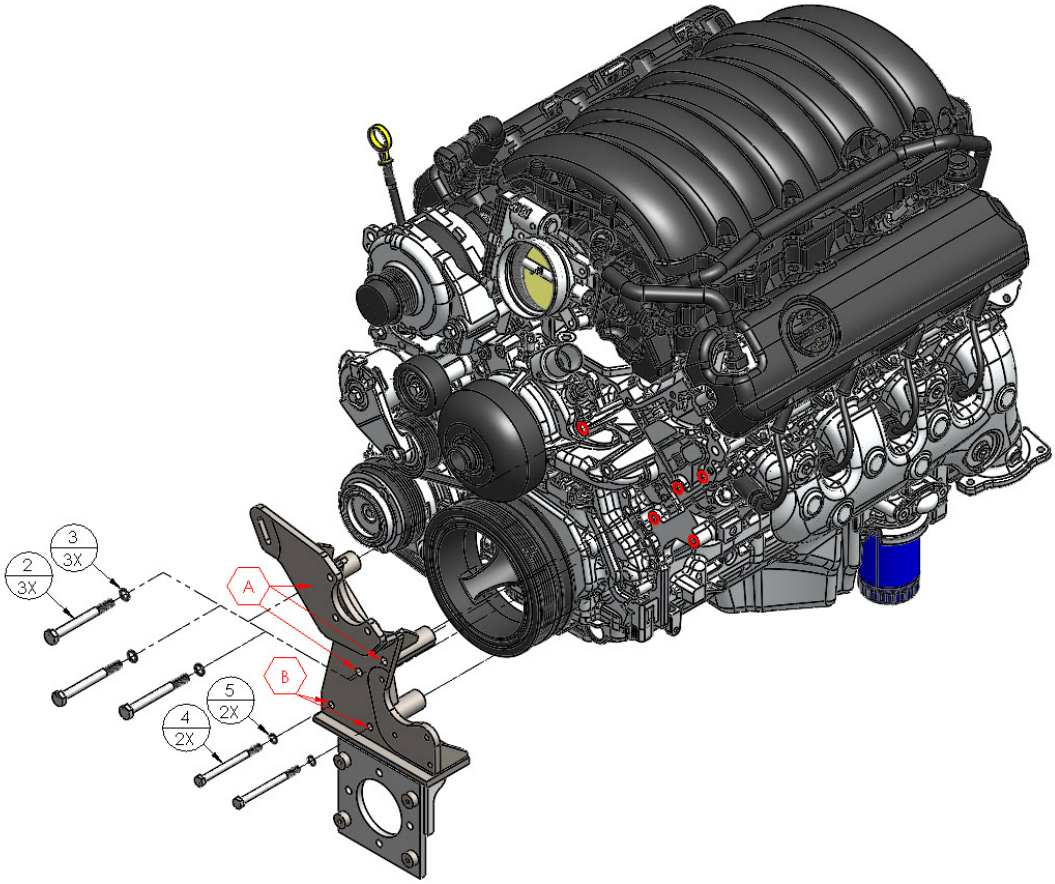

4/22/2021

CW Mill Equipment Co., Inc.
14 Commerce Drive Sabetha, KS 66534
Phone: (785) 284-3454
Fax: (785) 284-3601
Email: brackets@cwmill.com
Website: **www.cwkits.com**

SMK39A-I6

2021 Isuzu NPR-NPR-HD
2021 Chevrolet LCF 3500-4500
6.6L V8 Gas w/ A/C, w/o Dual Alternators

Requires SAE Two-Bolt 'A' Flange Pump; 6-Groove Clutch
Recommended 1.25 in^3 or 6 gal. Pump w/ 10hp Restriction (For Clearance)
Both Side and/or Rear-Ported Pump is Applicable
125% Overdrive Ratio w/ 6" Diameter Clutch

Belt Routing

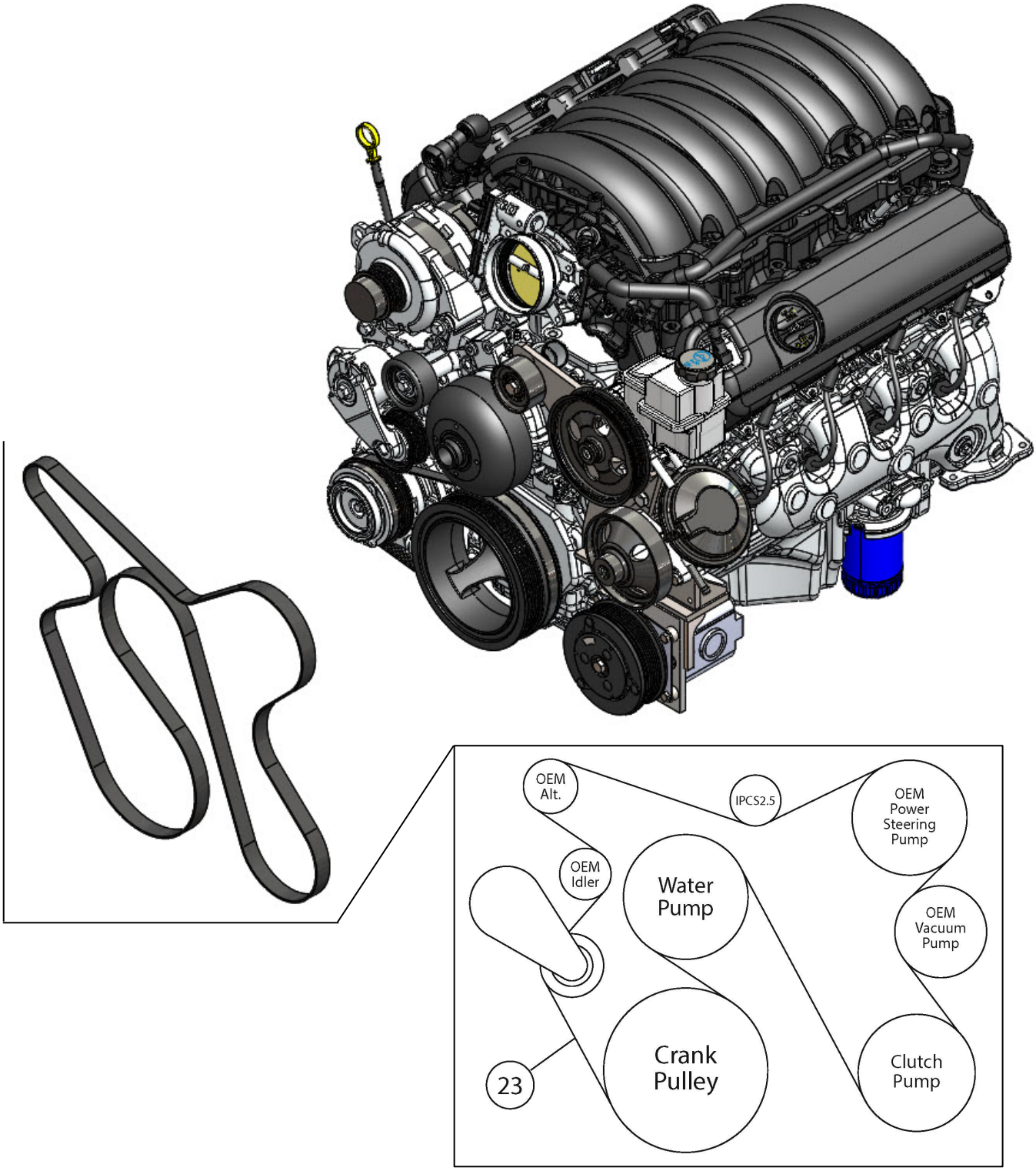

CW Mill Equipment Co., Inc.
14 Commerce Drive Sabetha, KS 66534
Phone: (785) 284-3454
Fax: (785) 284-3601
Email: brackets@cwmill.com
Website: www.cwkits.com

SMK39A-I6

2021 Isuzu NPR-NPR-HD
2021 Chevrolet LCF 3500-4500
6.6L V8 Gas w/ A/C, w/o Dual Alternators

Requires SAE Two-Bolt 'A' Flange Pump; 6-Groove Clutch
Recommended 1.25 in^3 or 6 gal. Pump w/ 10hp Restriction (For Clearance)
Both Side and/or Rear-Ported Pump is Applicable
125% Overdrive Ratio w/ 6" Diameter Clutch

NOTES

Disclaimer: (1.) Due to the custom nature and variation of all add-on systems of this type, no complete system kits are offered by the manufacturer, and any group of parts marketed as a kit is limited to only the individually defined parts in that specific kit. The system designer's rotating accessory components are not included, offered, or fully known by the manufacturer. In addition to the absence of the rotating accessory system, other potential components such as additional clamps, brackets, wear liners, hardware, or other items that may be required by the system designer must be identified and supplied by the actual system designer. (2.) Due to vehicle manufacturer's assembly tolerances, production changes, and installation variances, it is the buyer's responsibility to ensure adequate clearance for all components including space for and safe location of the fan, radiator, all lines, and wires. Check for possible movement, vibration, friction points, heat exposure and/or shifting of any and all components such as hoses, wires, and all other components including those that may otherwise be considered non-moving and/or unaffected by the installation (3.) The buyer is responsible for the entire installation of a mounting kit as the mounting kit is part of a custom process controlled by the buyer through their whole system design and directed installer as the installer evaluates, locates, routes, aligns, and tightens all components while determining if additional clamps, brackets, wear-liners, or other components may be required, beyond those included in the kit. Any additional items required, beyond those included in the kit, are to be provided at the expense of the buyer. (4.) The buyer is responsible for the development and communication of their whole system installation procedures, safety precautions, application, and use of the engine accessory mounting kit in their system, including efforts to maintain vehicle control and prevent pinch, wear, impact, and/or burn exposure on all hoses, wires, and other parts. (5.) The buyer is responsible for providing trained and experienced installation decision making with technical know-how to apply professional judgment that specifically applies to each individual installation. The buyers chosen installers must be qualified and experienced technicians that are familiar with the vehicle and accessory being mounted as well as the buyer's whole system design and installation procedures associated with the kit. (6.) The buyer is responsible for determining and achieving compliance to all regulatory issues that apply to the use of all products. (7.) The manufacturer reserves the right to make changes and/or improvements to any product at any time with or without notice.