CW Mill Equipment Co., Inc.
14 Commerce Drive Sabetha, KS 66534
Phone: (785) 284-3454
Fax: (785) 284-3601
Email: brackets@cwmill.com
Website: **www.cwkits.com**
MOUNTING KITS

VFK130J180-6

2020-2022 Ford Transit
3.5L PFDi V6 Gas w/ A/C, w/o Dual Alt., w/-w/o AWD

For use w/ 3" Spool J-180 Style Alternator
Requires 6-Groove Pulley

INSTALLATION NOTES

1. The buyer is responsible for providing trained and experienced installation decision making with technical know-how to apply professional judgment that specifically applies to each individual installation.

2. Be sure to read and understand all available information including but not limited to instructions, warnings, sales terms, and warranties for the vehicle and all system components prior to attempting installation.

3. Disconnect the negative battery cable. Remove air filter box to gain access to the OE A/C compressor. Remove the 6-groove serpentine belt and the 4-groove belt. The 4-groove belt will not be reused, so it is easiest to remove it by cutting it off. Remove the three bolts holding the OE A/C compressor onto the engine. Lay the compressor off to the side. Remove the two split bushings from the front A/C mounting locations.

4. Install main bracket (1) onto the engine with bolt (9) at location [A] and two alignment bushings (10) at locations [B, C]. Torque bolt (9) to 30-35 ft. lbs. Install the OE A/C compressor using bolts (7) and flat washers (8) at locations [B, C, D]. Make certain the compressor is over the alignment bushings. Torque bolts to 22-26 ft. lbs.

5. Install the new stretch-fit belt (33) onto the OE A/C compressor using zip ties to hold the belt onto the crank pulley. It may be helpful to watch a YouTube video on how to install a stretch-fit belt. Reinstall the 6-groove belt back to its original routing as shown.

6. Remove the heater hose valve from the lower radiator support brace. Retain the bolts as they will be reused. Remove the bolts holding the lower radiator support and remove it from the vehicle. Install the new radiator support (23) back to its original location on the vehicle reusing the OEM bolts. Replace the heater hose valve reusing the OEM bolts.

7. Remove the crank bolt from the inside of the damper. Install pulley adaptor (3) with bolt (6) finger tight. Rotate the adaptor CCW until it bumps up against the damper spokes then torque bolt (6) to 100 ft. lbs. Install the pulley onto the adaptor with bolts (5) and torque them to 22-26 ft. lbs.

8. Install the alternator using mounting hardware (17-22). **NOTE:** The heater hose will be rerouted after the alternator is in place. Torque bolts to 30-35 ft. lbs. Remove the outer front oil pan bolt from the driver's side of the oil pan. Install tensioner bracket (2) with bolts (11) into the main bracket (1), and bolt (12) with flat washer (13) and bushing (14) into the front oil pan hole location [E]. Run all bolts in finger tight then torque them to 22-26 ft. lbs. Install tensioner (15) with bolt (16) then install the alternator drive belt (34).

9. Drain the antifreeze from the engine. Remove the heater hose from the valve at the lower radiator support and install the hose (30) with the short end at the valve with clamp (32). Run the hose over the alternator and secure it with the heater hose support brace (24) that is attached to the alternator bracket (1) with hardware (25-26), and loom clamp (27) that is attached to the heater hose support brace (24) with hardware (28-29). Make certain the hose does not rest on the alternator or comes in contact with any hot or moving parts. Use the double-ended hose barb (31) to tie into the other end of the hose at the best suitable place with clamps (32). Replace the antifreeze.

CAUTION: Before starting the engine, check for any water leaks and any hoses or wires that were disturbed during installation do not come in contact with any hot or moving parts. Run engine and check for proper belt tracking, adjust if necessary.

CW Mill Equipment Co., Inc.
14 Commerce Drive Sabetha, KS 66534
Phone: (785) 284-3454
Fax: (785) 284-3601
Email: brackets@cwmill.com
Website: **www.cwkits.com**
MOUNTING KITS

VFK130J180-6

2020-2022 Ford Transit
3.5L PFDi V6 Gas w/ A/C, w/o Dual Alt., w/-w/o AWD

For use w/ 3" Spool J-180 Style Alternator
Requires 6-Groove Pulley

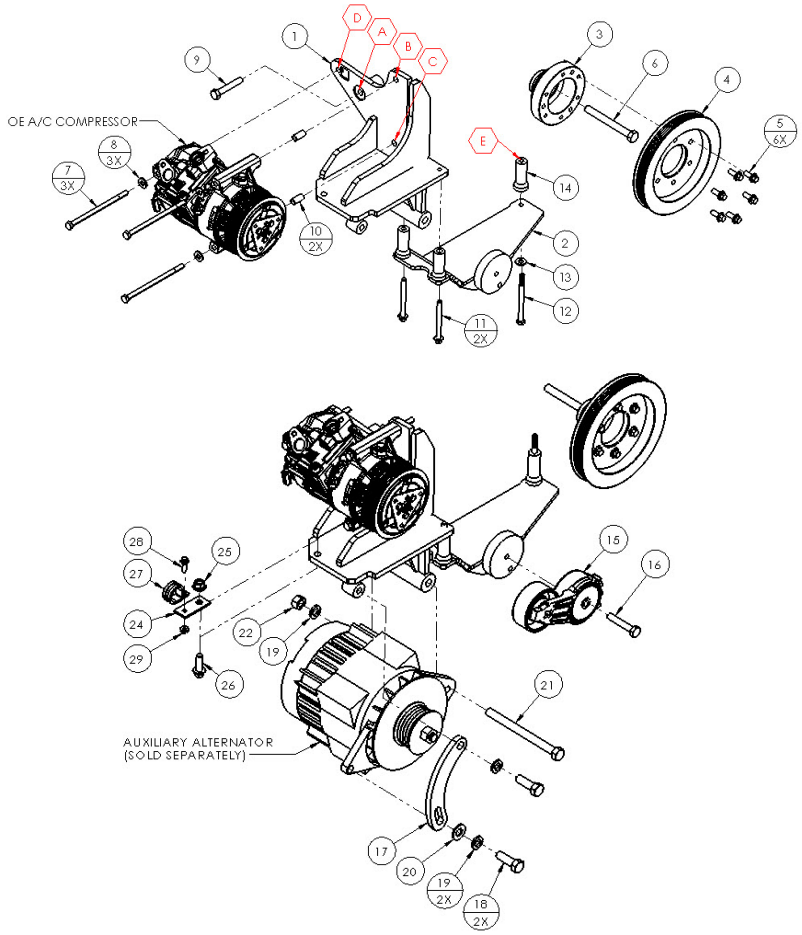

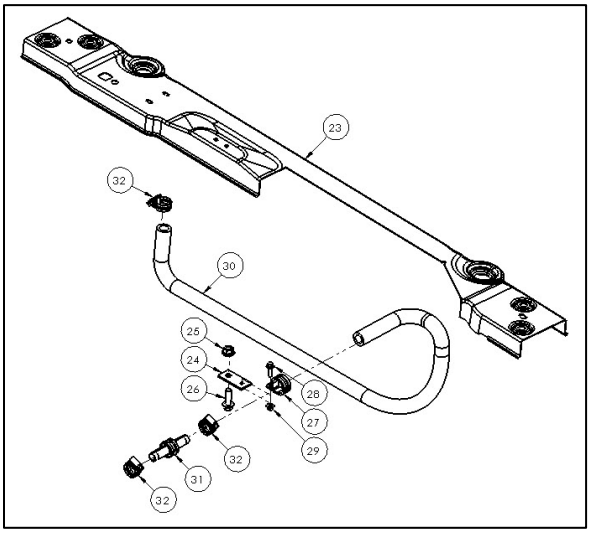

Mod. Radiator Brace (23), Heater Hose Assembly (24-32)
Illustration View from Top, Back of the Engine Bay

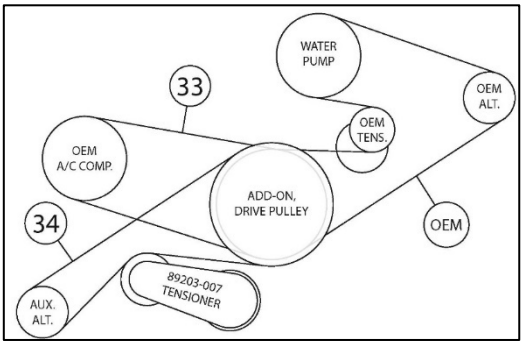

Belt Routings (33-34)

PARTS LIST

Item	Part Number	Description	Qty.	Item	Part Number	Description	Qty.
Main Bracket				**Auxiliary Alternator Mounting Hardware**			
1	VFMB130J180-MB	Main Bracket	1	17	J180-B3	J-180 Alternator Slide	1
Tensioner Bracket				18	1013337	1/2"-13 x 1-1/2" NC Bolt	2
2	VFMB130J180-TB	Tensioner Bracket	1	19	1010318	1/2" Lock Washer	3
Add-on Drive Pulley Assembly				20	1006931	1/2" Flat Washer	1
3	VFPA376	Pulley Adapter	1	21	1006120	1/2"-13 x 6" NC Bolt	1
4	VFPC376-7.5	7.5" 6-Groove Drive Pulley	1	22	1018231	1/2"-13 NC Nut	1
5	1013329	M8-1.25 x 20mm Flange Bolt	6	**Modified Radiator Support Brace**			
6	1018230	M12-1.5 x 110mm Hex Bolt	1	23	VFB130TM-02	Radiator Cross Support (Modified)	1
Main Bracket Mounting Hardware				**Heater Hose Assembly**			
7	1018288	M8-1.25 x 140mm Hex Bolt (P/T)	3	24	VFB130TM-03	Heater Hose Support Brace	1
8	1010202	M8 Flat Washer	3	25	1018204	M10-1.5 Flange Nut	1
9	1007594	M10-1.5 x 60mm Hex Bolt	1	26	1006927	M10-1.5 x 30mm Flange Bolt	1
10	001219	Alignment Bushing	2	27	1005110	#16 Adel Clamp	1
Tensioner Bracket Mounting Hardware				28	1016330	M6-1.0 x 20mm Flange Bolt	1
11	1018207	M8-1.25 x 80mm Flange Bolt	2	29	1016331	M6-1.0 Flange Nut	1
12	1011957	M8-1.25 x 100mm Hex Bolt	1	30	1016303	80405 Dayco 90° Hose	1
13	1010202	M8 Flat Washer	1	31	1006206	5/8" Double-Ended Hose-Barb Fitting	1
14	VFB130TM-01	2.250" Machined Bushing	1	32	1006198	#10 Hose Clamps	3
Tensioner Assembly				**Belts**			
15	89203-007	Custom Tensioner	1	33	K040374SF	Gates 4-Groove 37.4" Stretch-Fit	1
16	1006925	M10-1.5 x 55mm Hex Bolt	1	34	K060400	Gates 6-Groove 40.0"	1

CW Mill Equipment Co., Inc.
14 Commerce Drive Sabetha, KS 66534
Phone: (785) 284-3454
Fax: (785) 284-3601
Email: brackets@cwmill.com
Website: **www.cwkits.com**

VFK130J180-6

2020-2022 Ford Transit
3.5L PFDi V6 Gas w/ A/C, w/o Dual Alt., w/-w/o AWD

For use w/ 3" Spool J-180 Style Alternator
Requires 6-Groove Pulley

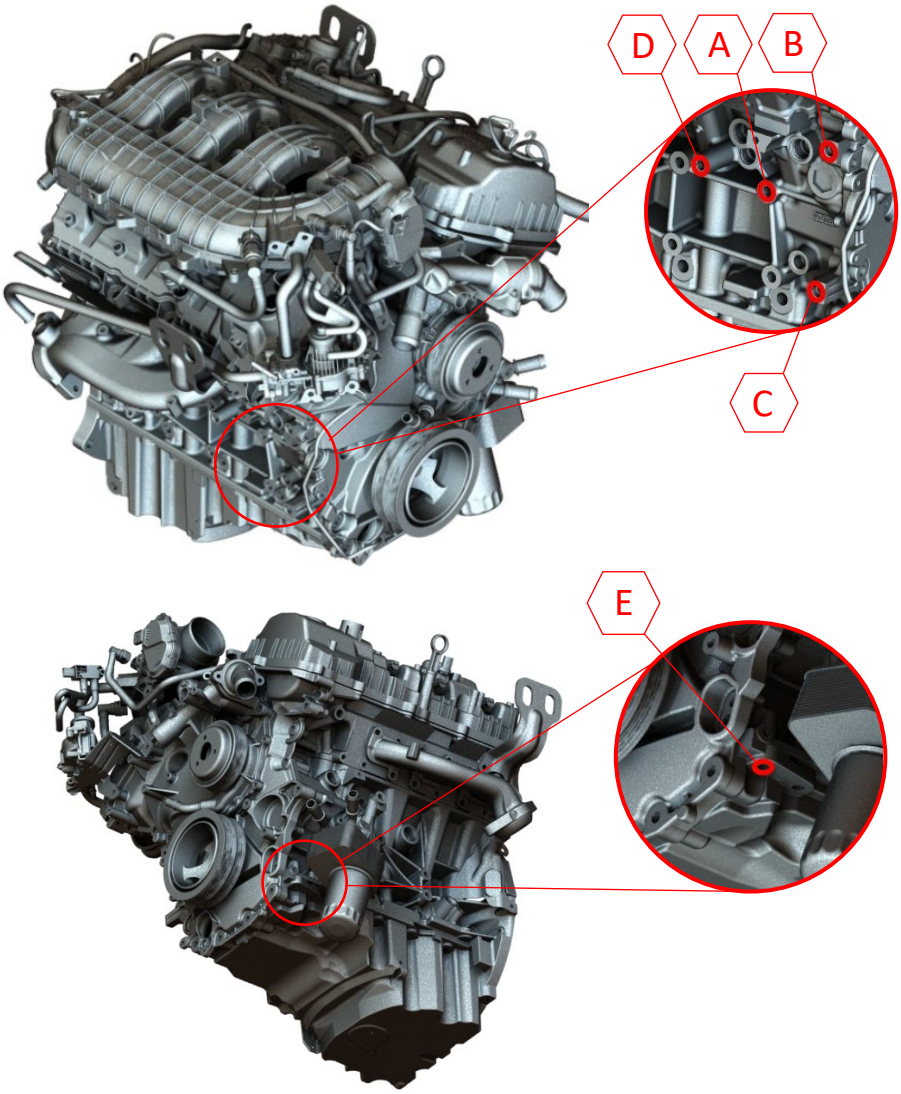

Mounting Locations [A-E]

Disclaimer: (1.) Due to the custom nature and variation of all add-on systems of this type, no complete system kits are offered by the manufacturer, and any group of parts marketed as a kit is limited to only the individually defined parts in that specific kit. The system designer's rotating accessory components are not included, offered, or fully known by the manufacturer. In addition to the absence of the rotating accessory system, other potential components such as additional clamps, brackets, wear liners, hardware, or other items that may be required by the system designer must be identified and supplied by the actual system designer. (2.) Due to vehicle manufacturer's assembly tolerances, production changes, and installation variances, it is the buyer's responsibility to ensure adequate clearance for all components including space for and safe location of the fan, radiator, all lines, and wires. Check for possible movement, vibration, friction points, heat exposure and/or shifting of any and all components such as hoses, wires, and all other components including those that may otherwise be considered non-moving and/or unaffected by the installation (3.) The buyer is responsible for the entire installation of a mounting kit as the mounting kit is part of a custom process controlled by the buyer through their whole system design and directed installer as the installer evaluates, locates, routes, aligns, and tightens all components while determining if additional clamps, brackets, wear-liners, or other components may be required, beyond those included in the kit. Any additional items required, beyond those included in the kit, are to be provided at the expense of the buyer. (4.) The buyer is responsible for the development and communication of their whole system installation procedures, safety precautions, application, and use of the engine accessory mounting kit in their system, including efforts to maintain vehicle control and prevent pinch, wear, impact, and/or burn exposure on all hoses, wires, and other parts. (5.) The buyer is responsible for providing trained and experienced installation decision making with technical know-how to apply professional judgment that specifically applies to each individual installation. The buyers chosen installers must be qualified and experienced technicians that are familiar with the vehicle and accessory being mounted as well as the buyer's whole system design and installation procedures associated with the kit. (6.) The buyer is responsible for determining and achieving compliance to all regulatory issues that apply to the use of all products. (7.) The manufacturer reserves the right to make changes and/or improvements to any product at any time with or without notice.